FRP GLOBAL HUB
EVERYTHING FRP & GRP. IN ONE PLACE.

SAMPLE ENGINEERING REPORT

FRP Piping Isometric & Quantity Analysis

Professional FRP/GRP Piping Quantity Analysis, with Optional Spool Detailing & Fabrication Support.

DOCUMENT	REVISION	ISSUE DATE	SYSTEM
FGH-PIQA-SAMPLE-01	0 (Sample Issue)	08 Nov 2026	DN 2000 / DN 1600

HOW THE SERVICE WORKS

1 You provide
2D piping isometric drawings or a 3D AutoCAD model.

2 We analyse
FRP GLOBAL HUB analyses the drawings and extracts pipe and fitting quantities.

+ Optional services
Spool detailing and fabrication support, available upon request.

PROJECT QUANTITY OVERVIEW

72.085 m	23 Nos.	2	6
TOTAL PIPE LENGTH	TOTAL FITTINGS	PIPE DIAMETERS	FITTING CATEGORIES

Contents

1. Piping Arrangement — 2D Isometric & 3D Model
2. Pipe & Fittings Quantity Summary
3. Additional Engineering Services
4. Scope Notes & Enquiries

Intended for

EPC contractors, engineering consultants, FRP/GRP pipe manufacturers, industrial project contractors and piping fabrication companies.

> This sample report demonstrates the FRP Piping Isometric & Quantity Analysis service. It is not a certified construction or fabrication drawing.

SECTION 1

Piping Arrangement — 2D Isometric & 3D Model

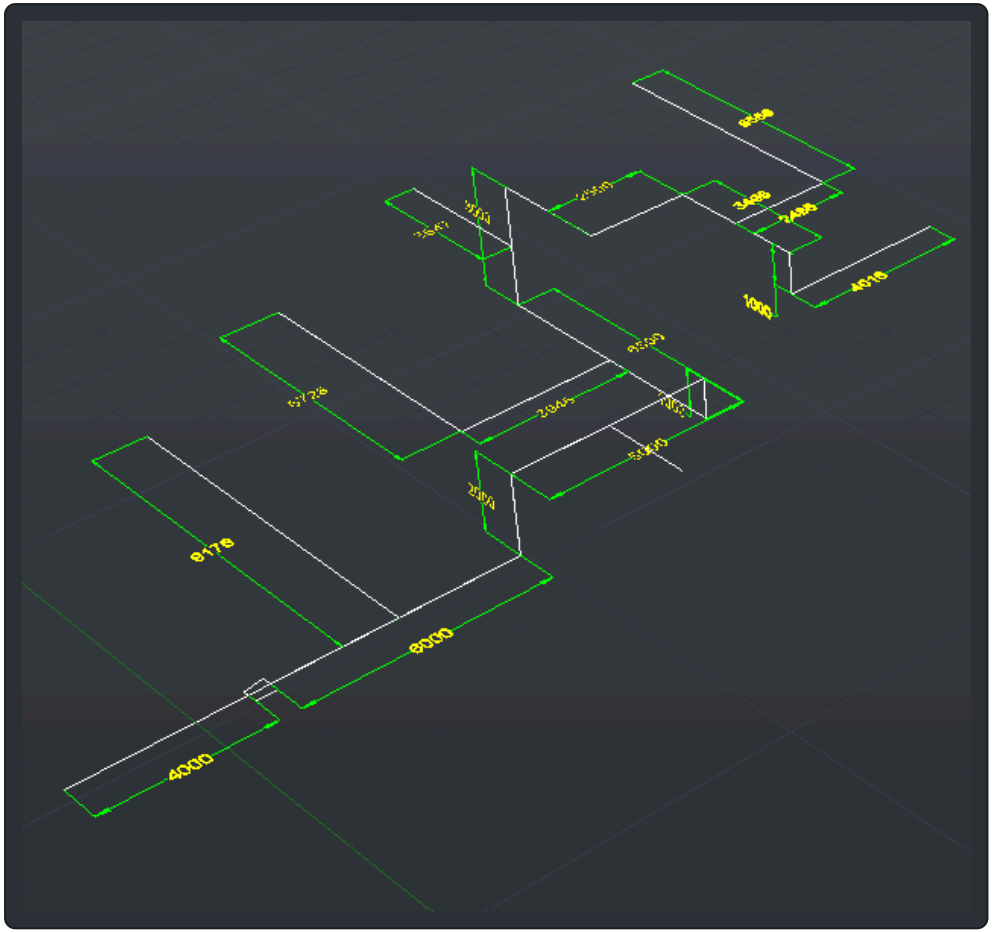

A · 2D single-line isometric All dimensions in mm

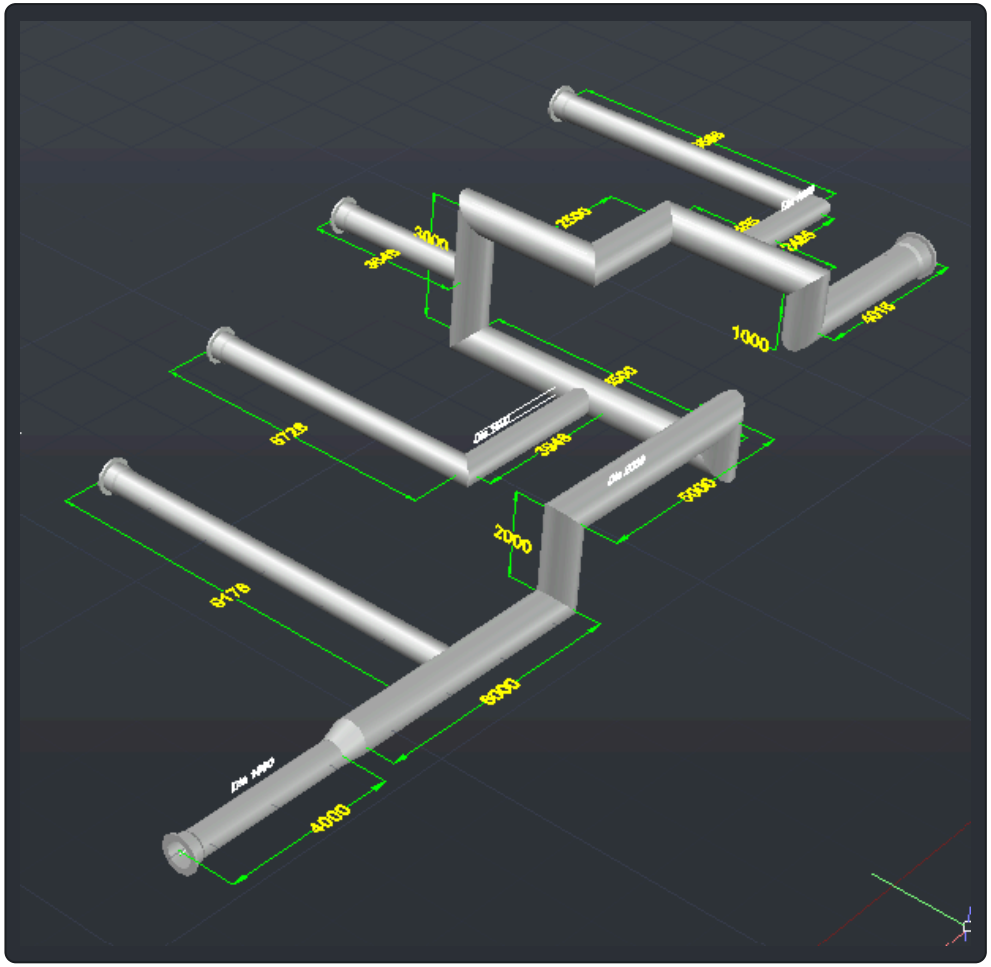

B · 3D model representation DN 2000 / DN 1600

Views A and B are extracted from the sample AutoCAD piping model. The piping geometry, proportions and dimensions have not been redrawn or modified. All dimensions are in millimetres. The full composite view is shown on page 3.

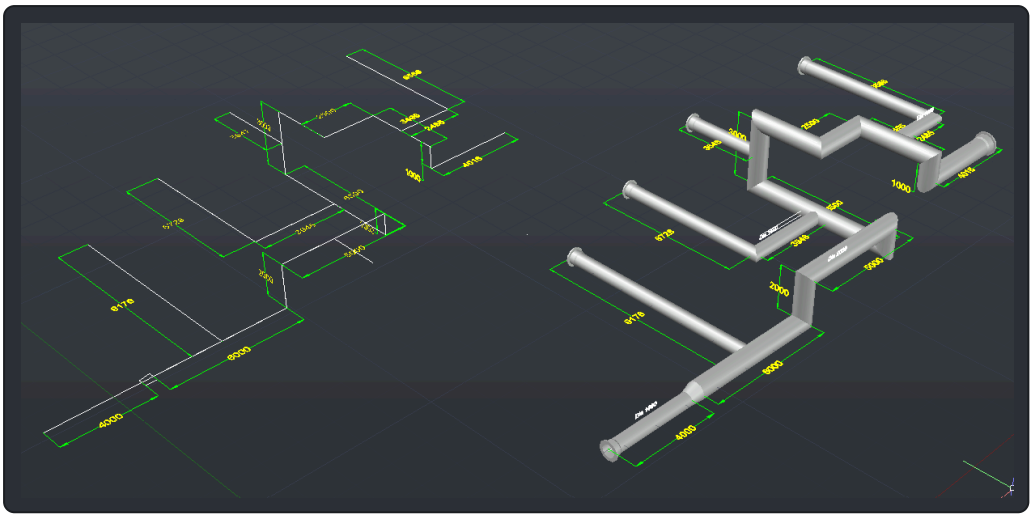

Composite view — 2D isometric (left) and 3D model (right) Sample AutoCAD piping model

SECTION 2

Pipe & Fittings Quantity Summary

SAMPLE PROJECT DATA — PIPE & FITTINGS QUANTITY ANALYSIS

2.1 Pipe Quantity Summary

SL. NO.	NOMINAL SIZE	PIPE DIAMETER (MM)	TOTAL LENGTH (MM)	TOTAL LENGTH (M)
01	DN 2000	2000	35,516	35.516
02	DN 1600	1600	36,569	36.569
	TOTAL PIPE LENGTH		**72,085**	**72.085**

2.2 Fittings Quantity Summary

SL. NO.	FITTING DESCRIPTION	QUANTITY (NOS.)
01	Flange DN 1600	5
02	Flange DN 2000	1
03	Eccentric Reducer DN 2000 × DN 1600	1
04	90° Elbow DN 2000	10
05	90° Elbow DN 1600	2
06	Tee DN 2000 × DN 1600	4
	TOTAL FITTINGS	**23**

SECTION 3

Additional Engineering Services

OPTIONAL SERVICES — AVAILABLE UPON CUSTOMER REQUEST

The following services are available upon customer request. They are **optional**, are not included in the basic sample quantity summary, and are quoted separately according to project requirements.

Spool Identification & Numbering
Spool identification and numbering based on the customer's existing project numbering system. Alternatively, FRP GLOBAL HUB can establish a spool numbering system upon request.

Spool-wise Bill of Materials (BOM)
Pipe and fittings listed per spool for fabrication and dispatch.

Elbow Dimensional Analysis (L1 & L2)
Elbow leg dimensions L1 and L2 for accurate pipe cut lengths.

Fitting Dimensional Details
Dimensional data for reducers, tees and flanges.

Pipe Cut-Length Calculations
Net pipe cut lengths per spool after fitting allowances.

Fabrication Data Preparation
Organised fabrication data for FRP/GRP fabrication teams.

SECTION 4

Scope Notes

- Section 2 presents the sample project pipe and fittings quantity analysis.
- Pipe lengths are given in both millimetres and metres. Sizes use DN designation throughout.
- No dimensions or fitting data have been added beyond the sample drawing and quantity summary.
- Section 3 services are optional and quoted separately according to project requirements.

REQUEST A QUOTATION

Have an FRP/GRP Piping Project?

Submit your piping isometric drawings or 3D AutoCAD model to FRP GLOBAL HUB. Receive a project-specific quotation for pipe and fitting quantity analysis, with optional spool detailing and engineering support.

Request a Quotation →

frpglobalhub.com/services/frp-project-material-takeoff/

Technical disclaimer: This sample report demonstrates the FRP Piping Isometric & Quantity Analysis service. It is not a certified construction or fabrication drawing and must not be used for construction, fabrication or procurement without project-specific verification.
© 2026 FRP GLOBAL HUB · https://frpglobalhub.com